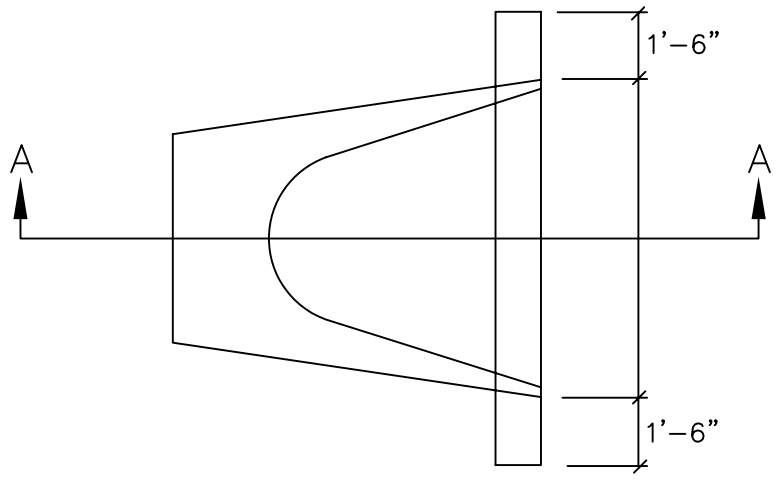


PLAN VIEW

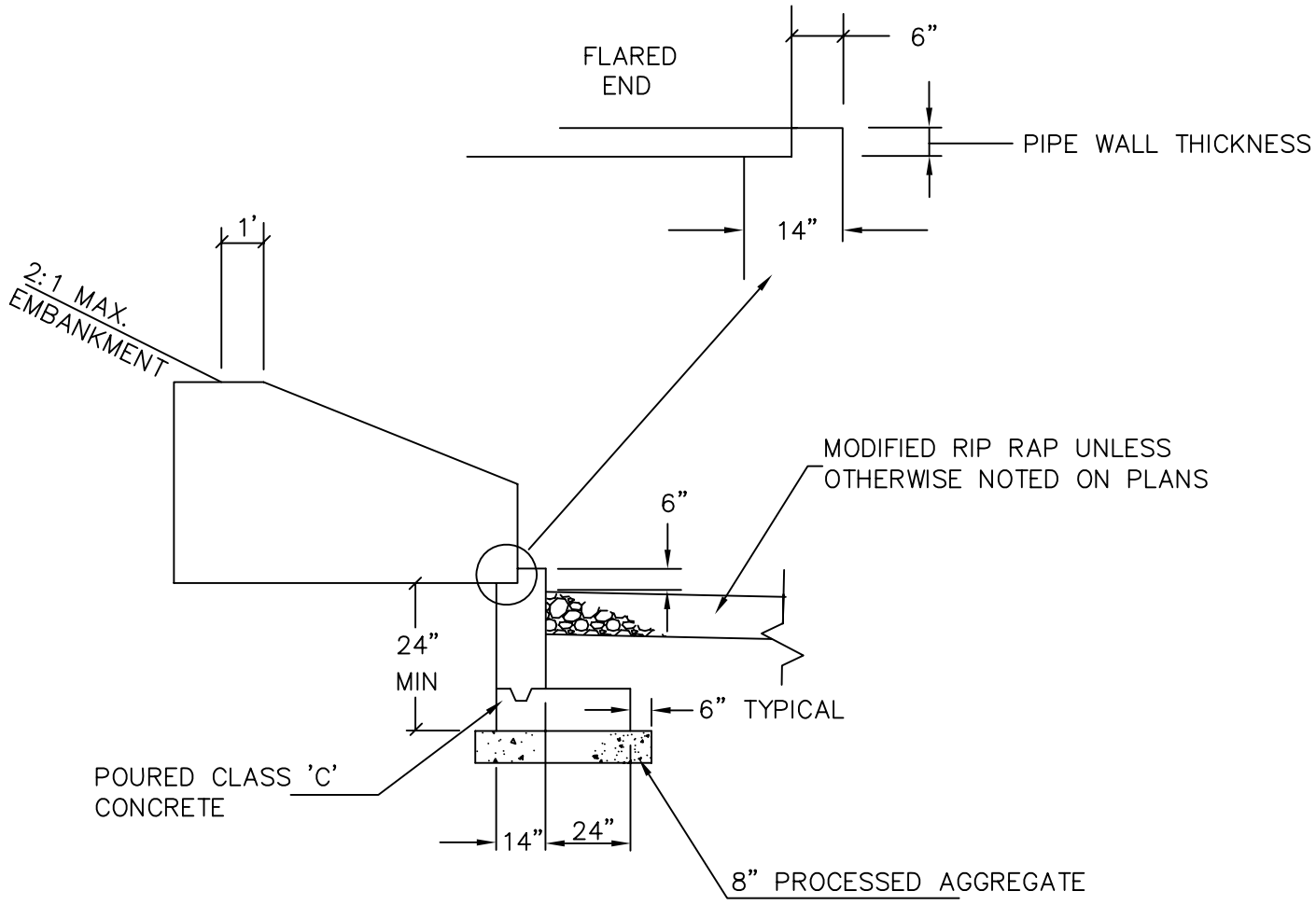


SECTION A-A

| | | |
|---|---|---|
| TOWN OF WINDSOR<br>Engineering Department | | SUPPORT WALL FOR<br>FLARED END PIPE<br>D-314 |
| SCALE: HOR. NTS / VER. | DATE: AUGUST 2008 | |